SPOTLIGHT
professional lighting for the performing arts

THE

user manual

Mark-II

rev. 18/04/2023

Index

Part 1. Safety instructions 3
Unpacking 3
Printed notes on the fixtures 3
Installation 3
Electrical connection 3
Maintenance 3
Compliance 3
Part 2. General info 4
Hardware 4
Electrical and DMX connections 4
Display 5
Part 3. Settings 6
Part 4. DMX personalities 7
White 50-100-200W 7
White 300-700W 7
Tunable White 8
RGBW 8
6 Colours 9
8 Colours 10
Part 5. Related tables 11
SERVICE channel 11
STROBE & STORE channel 11
CCT channel 12
ROSCO FILTERS channel Mark-II 13
LEE FILTERS channel Mark-II 14
MANUAL PRESET / COLOUR / CCT Mark-II 15
DELAY channel 16
Part 6. RDM (Remote Device Management) 16
Part 7. Error list (Mark-II) 16
Part 8. How to 17
HOW TO SET DMX ADDRESS AND TO CHOOSE DMX PERSONALITY (DMX chart) 17
HOW TO EMULATE THE PERFORMANCE OF HALOGEN LAMP 17
HOW TO INCREASE THE LIGHT OUTPUT +20% 17
HOW TO SET THE FAN MODE 17
HOW TO SET THE DISPLAY 18
HOW to REMOVE FLICKERING EFFECT IN CAMERAS 18
HOW TO HOW TO CALIBRATE LED COLORS 18
HOW TO SET THE COLOUR CUSTOM PRESETES 18
FUNZIONI AVANZATE SULLA GESTIONE DEL COLORE 18
HOW TO SET STAND-ALONE AND MASTER-SLAVE FUNCTIONS 19
Part 9. Logistics 20

Part 1. Safety instructions

This manual contains all the safety information required for the appropriate use of the fixture. It shall be carefully read it and stored for future requirements.

Spotlight sc will not be responsible for any damage to the fixture itself, to other objects or people due to improper installation or use of the fixture either than hereinafter specified. Additionally, you are required to download the User Manual from www.spotlight.it for a comprehensive knowledge al each and all functions.

UNPACKING

Remove the fixture from its package and make sure no damage incurred during transport. In the event of damages, a report or claim shall be issued to the transport agent and the seller to start the repair or replacement process.

PRINTED NOTES ON THE FIXTURES

A label of the fixture' side displays the following information:

- Model part number
- Mains a.c.~ voltage (V)
- Power (W)
- Frequency (Hz)
- Protection rate (IP 20)
- ta max: maximum ambient temperature allowed (°C)
- t max: external surface temperature at thermal regime (°C)
- ……X m minimum recommended distance between the fixture and the lighted object (m)
-

Risk Group 2, in compliance with EN62471. Do not face directly the light source as it might damage your eyesight.
- **Photo-Biological safety**: do not stare at the light source while functioning
- **Dispose of waste**: in compliance to 2012/19/EU, this fixture shall be disposed according to proper waste-class regulation

INSTALLATION

- This fixture is designed only for professional use, not for domestic use or handling
- This fixture can be either hung from top or fitted onto a tripod
- Make sure the hanging point is safe and stable. Additionally add a safety rope if required by local safety regulation
- Do not focus the light beam straight onto somebody's eyes

ELECTRICAL CONNECTION

Electrical wiring, plugging and cabling shall be made by professional or qualified technicians. Before and during installation, attend to the following procedures:

- Check that Mains Voltage and Frequency comply with what printed on the fisture's label
- Always check the Mains line is properly grounded
- Check the working power of the fixture, as printed on its label, to prevent from line overload
- This fixtures is foreseen for indoor use: it shall be protected from rain and humidity if used under different conditions (IP 20)

MAINTENANCE

Do not open the fixture before disconnecting from the mains: an electrical shock might occur. A complete inspection shall be made once a year to check the electrical and mechanical parts' integrity and the software upgrades. Repairs shall be made by the manufacturer only or its appointed after-sale service center. After cleaning, the lenses shall be re-assembled and, if scratched or ruined, they shall be replaced with original parts.

COMPLIANCE

This products complies with the European Directives:

- 2014/35/EU: Safety on Low Voltage Directive LVD
- 2014/30/EU: Electromagnetic Compatibility EMC
- 2011/65/EU: Restriction of Hazardous Substances Directive RoHS

CE

Part 2. General info

All Spotlight lights, depending on the LED source installed and power, can be grouped into 6 groups (represented by 6 colours).

<table>
<tr><th rowspan="2">LED Power</th><th rowspan="2">Powercon daisy chain</th><th rowspan="2">Cold start Inrush current</th><th rowspan="2">Type</th><th colspan="5">LED Source</th></tr>
<tr><th>White</th><th>Tunable White</th><th>RGBW</th><th>6C</th><th>8C</th></tr>
<tr><td>50W</td><td rowspan="6">Total load max 16A - 3,5KW</td><td rowspan="4">60A/230VAC</td><td>Fresnel PC Profile</td><td rowspan="4">1A
Mark-II
Firmware 1.01
DMX chart 1A</td><td rowspan="3"></td><td rowspan="3"></td><td rowspan="3"></td><td rowspan="3"></td></tr>
<tr><td>85W</td><td>Downlight</td></tr>
<tr><td>100W</td><td>Fresnel PC Profile</td></tr>
<tr><td>200W</td><td>Fresnel PC Profile</td><td></td><td rowspan="3">3
Firmware 1.01
DMX chart 3</td><td></td></tr>
<tr><td>300W</td><td rowspan="2">80A/230VAC</td><td>Cyclorama</td><td></td><td></td><td></td><td rowspan="2">4
Mark-II
Firmware 1.01
DMX chart 4</td></tr>
<tr><td>700W</td><td>Fresnel PC Profile Followspot</td><td rowspan="2">1B
Mark-II
Firmware 1.03
DMX chart 1B</td><td rowspan="2">2
Mark-II
Firmware 1.01
DMX chart 2</td><td rowspan="2"></td><td rowspan="2">5
Mark-II
Firmware 1.07
DMX chart 5</td></tr>
<tr><td></td><td>40A/230VAC</td><td>Fresnel PC Profile Followspot</td></tr>
</table>

HARDWARE

Fresnel and PC:
1. Suspension yoke
2. Handle for tilt regulation
3. Accessory slot
4. Accessory locking and releasing guide
7. Display and menu buttons
8. DMX IN connector
9. DMX THRU connector
10. Fuse
11. Power IN (Powercon connector)
12. Power OUT (Powercon connector)
13. Light intensity adjustment knob
14. CCT / Colour wheel adjustment knob

Profile and Followspot have also:
5. Handles for lens adjustment (zoom and focus)
6. Levers for framing shutters adjustment
15. Screw for front housing removal
16. Front housing rotation stop knob
17. Front housing access door screw for lenses cleaning
18. Gobo slot sliding cover

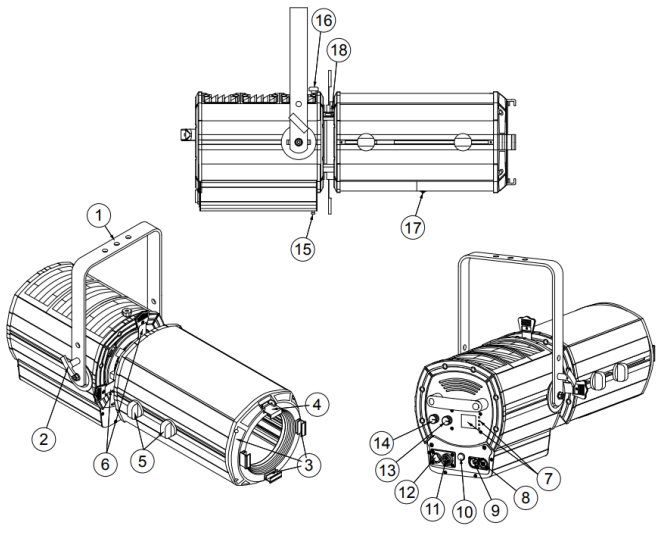

ELECTRICAL AND DMX CONNECTIONS

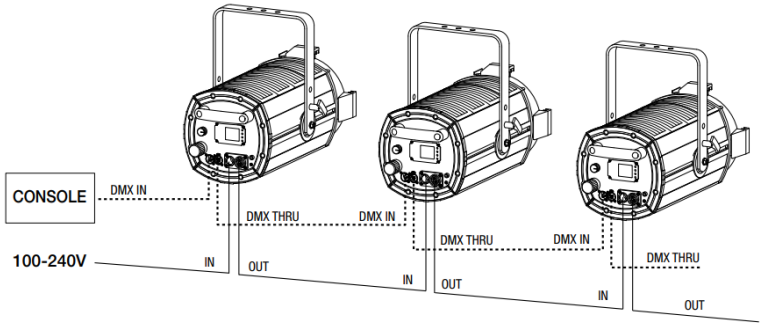

DISPLAY

When switched on, the installed software version is displayed, followed by the display of the default settings, ie the currently set operating mode.

	White	White	TW	RGBW	6C	8C
If the luminaire is DMX controlled, after 3 seconds the display will show the mode and DMX address. Otherwise it will show the potentiometers status. By pressing the ENTER (or SETUP) button you access the SETTINGS. With the PREV and NEXT buttons you can scroll the items list which in case of value type entries will have the function of increasing (+) or decreasing (-) the values. The ENTER button allows to access the submenu and change the values which can be confirmed by pressing ENTER or canceled with the BACK button, which can be used also to exit the submenu and go back to the main menu.	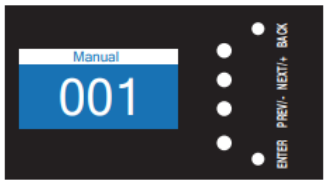	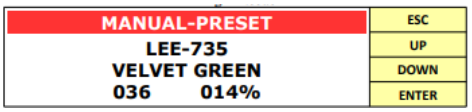				

Display **Mark-II**
 	
- Red band: the working list of presets. There are 3 lists:
  ○ MANUAL PRESET: LEE filters + CCT
  ○ MANUAL COLOUR: LEE filters
  ○ MANUAL CCT: CCT (1500K – 20000K)
To move from one list of presets to another use the arrows
 	
- Filter name + filter code
- CCT
 	
- Dimmer value 0 – 100%
- Dimmer value 0 – 255
 	
When switched on, the fixture recalls the last saved dimmer and preset value.
 	
How to save a preset:
1. select the desired dimmer and preset values
2. press and hold the red encoder (CCT/COLOUR WHEEL) for 3 seconds
3. saving will be confirmed by the red color of the text
 	
Note:
- if you change the dimmer, the color goes from red to yellow (and when you go back to the saved value it goes back to red)
- if you change the preset, the color goes from red to white
 	
If the fixture is connected to a DMX console, the encoders are automatically disabled. If you need to activate the encoders without disconnecting the fixture from the console, press and hold the first button from the top for 2 seconds. To exit this mode, just hold down the same button for 2 seconds.
		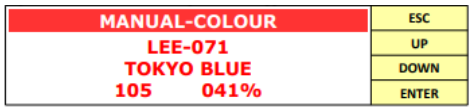
		
		 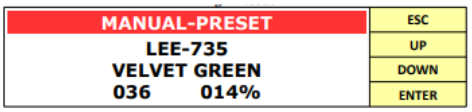				

All the luminaires are designed to be used in different operating modes:

- LOCAL ENCODER
- DMX
- RDM
- STAND ALONE (only for RGBW, 6C, 8C)

Input priority is given:

- in absence of the DMX signal the value set with the potentiometer will be active
- when there is the DMX signal the relevant signal is followed and the potentiometer will be ignored
- if the DMX signal is eliminated or lost, the DMX set level is kept until you act on the potentiometer, which will set the new value

All the fixtures are equipped with a temperature control of the LED and of the driver motherboard, which, to avoid an early deterioration in case of overtemperature, regulates the light intensity.

Some parameters can be modified directly into the fixture by using the SETTINGS menu or by using a consolle thanks to the DMX PERSONALITIES and related channels.

Part 3. Settings

This section lists all the menu functions, highlighting, for each of them, in which group they are present.

			Values	White 50-200	White 300-700	TW	RGBW	6C	8C	How to…
DMX SETTINGS	DMX ADDRESS		1 (default) - … - xxx	YES	YES	YES	YES	YES	YES	How to set the DMX address and DMX personality
	DMX PERSONALITY		See related table	DMX chart 1A	DMX chart 1B	DMX chart 2	DMX chart 3	DMX chart 4	DMX chart 5	
	WIRELESS DMX Mark-II	ACTIVATION	ON OFF (default)	YES	YES	YES	-	YES	YES	
		SHoW ID	24100 - …- 24300 (default) - … - 24359	YES	YES	YES	-	YES	YES	
		SHoW KEY	000 (default) - … - 500	YES	YES	YES	-	YES	YES	
STAND ALONE	STAND ALONE		DISABLED (default) STDALONE MANUAL STDALONE AUTO SCENE MASTER MANUAL MASTER AUTO SCENE SLAVE	-	-	-	YES	YES	YES	How to set the stand alone function
	MANUAL MODE									
	AUTO SCENE MODE									
	CUSTOM PRESETS									
OPTIONS	LED DELAY		OFF - 50 - … - 1000 (default) - … - 2000ms	YES	YES	YES	YES	YES	YES	How to emulate the performance of halogen lamp
	DIMMING CURVE		LINEAR (1) HALO (2) QUADRATIC (default) (3) GAMMA 2.6 (4) Mark-II GAMMA 2.8 (5) Mark-II S (6) Mark-II	YES	YES	YES	YES 1-2-3	YES	YES	
	AMBER SHIFT		ON OFF (default)	-	-	-	-	YES	YES	
	OUTPUT FREQUENCY		500 - 501 - … - 1200 (default) - … - 20000 Hz	YES	YES	YES	YES	YES	YES	How to remove flickering
	LED BOOST		ON OFF (default)	YES	-	YES	YES	YES	YES	How to increase +20% light output
	FAN MODE		AUTO (default) STANDARD SILENT	YES	YES	YES	YES	YES	YES	How to set the silent mode
	DISPLAY ROTATION		STANDARD (default) ROTATED	YES	YES	YES	YES	YES	YES	How to set the display
	DISPLAY ON/OFF		ON (default) OFF	YES	YES	YES	YES	YES	YES	
	MANUAL CONTROL Mark-II		ON (default) OFF	YES	YES	YES	-	YES	YES	Abilita/disabilita il funzionamento degli encoder
	LED CALIBRATION	RED	0..255 (default)	-	-	-	YES	YES	YES	How to set LED calibration
		GREEN	0..255 (default)	-	-	-	YES	YES	YES	
		BLU	0..255 (default)	-	-	-	YES	YES	YES	
		WHITE	0..255 (default)	-	-	-	YES	-	-	
		AMBER	0..255 (default)	-	-	-	-	YES	YES	
		CYAN	0..255 (default)	-	-	-	-	YES	YES	
		LIME	0..255 (default)	-	-	-	-	YES	YES	
	DEFAULT SET*			YES	YES	YES	YES	YES	YES	
	FACTORY SETTINGS**			YES	YES	YES	YES	YES	YES	
INFO	LED TEMPERATURE		°C	YES	YES	YES	YES	YES	YES	
	BOARD TEMPERATURE Mark-II			YES	YES	YES	-	YES	YES	
	CHIP TEMPEARURE Mark-II			-	YES	YES	-	YES	YES	
	LED TIME			YES	YES	-	-	-	-	
	RED LED TIME		hr - min	-	-	-	YES	YES	YES	
	GREEN LED TIME		hr - min	-	-	-	YES	YES	YES	
	BLU LED TIME		hr - min	-	-	-	YES	YES	YES	
	WHITE LED TIME		hr - min	-	-	-	YES	-	-	
	AMBER LED TIME		hr - min	-	-	-	-	YES	YES	
	CYAN LED TIME		hr - min	-	-	-	-	YES	YES	
	LIME LED TIME		hr - min	-	-	-	-	YES	YES	
	WARM WHITE TIME		hr - min	-	-	YES	-	-	YES	
	COLD WHITE TIME		hr - min	-	-	YES	-	-	YES	
	UNIT TIME		hr - min	YES	YES	YES	YES	YES	YES	
	SOFTWARE VERSION		V. .... Release date	YES	YES	YES	YES	YES	YES	

*DEFAULT SET: It brings the parameters back to the "original built-in settings" (i.e. fan speed, dimming curve, delay…) as they came out from factory
**FACTORY SETTINGS: Password-protected menu, used by Spotlight Tech. Dept to apply special settings (limit the current, working hours reset, limit the power consumption, …). These parameters do NOT affect the "default settings" NOTE: Not for final users

Part 4. DMX personalities

The following sections present the **Personalities**, called also **DMX charts**, available for each group to allow the lighting designer to choose which mode to operate the fixture in based on the parameters he decides to control and the number of channels available on the console he is using.

WHITE 50-100-200W

8 bit	1CH		
	Function	DMX value	Description
1 ch	DIMMER	0..255	from OFF (0) to full (255)

8 bit	2CH		
	Function	DMX value	Description
1 ch	DIMMER	0..255	from OFF (0) to full (255)
2 ch	STROBO	0 1..255	OFF from slow (3,86 s) to fast (30 ms)

16 bit	3CH		
	Function	DMX value	Description
1 ch	DIMMER	0..255	from OFF (0) to full (255)
2 ch	DIMMER FINE	0..255	from OFF (0) to full (255)
3 ch	STROBO	0 1..255	OFF from slow (3,86 s) to fast (30 ms)

CURRENT MODULATION Mark-II
This is an operating mode to eliminate flickering disturbances, caused by PWM driving of the LED, and acoustic disturbances, generated by electronic components.
This mode is specifically indicated for applications in TV Studios or acoustic sheels where maximum silence of the devices and the absence of flicker are required.

WHITE 300-700W

8 bit	1CH		
	Function	DMX value	Description
1 ch	DIMMER	0..255	from OFF (0) to full (255)

8 bit	3CH		
	Function	DMX value	Description
1 ch	DIMMER	0..255	from OFF (0) to full (255)
2 ch	STROBO & STORE	See related table	
3 ch	SERVICE	0..255	See related table

16 bit	6CH		
	Function	DMX value	Description
1 ch	DIMMER	0..255	from OFF (0) to full (255)
2 ch	DIMMER FINE	0..255	from OFF (0) to full (255)
3 ch	DELAY	See related table	
4 ch	FAN	0..255	from minimum to maximum
5 ch	STROBO & STORE	See related table	
6 ch	SERVICE	See related table	

TUNABLE WHITE

8 bit	EASY		
	Function	DMX value	Description
1 ch	DIMMER	0..255	from OFF (0) to full (255)
2 ch	CCT LINEAR	See related table	

8 bit	SPLIT		
	Function	DMX value	Description
1 ch	DIMMER	0..255	GM - GENERAL MASTER
2 ch	WARM WHITE	0..255	from OFF (0) to full (255)
3 ch	COLD WHITE	0..255	from OFF (0) to full (255)
4 ch	STROBO & STORE	See related table	
5 ch	SERVICE	See related table	

16 bit	STUDIO		
	Function	DMX value	Description
1 ch	DIMMER	0..255	from OFF (0) to full (255)
2 ch	DIMMER FINE	0..255	from OFF (0) to full (255)
3 ch	CCT PRESET	See related table	
4 ch	WW +/- correzione live del CCT STEP selezionato (= "zero point")	0..15 6..111 112..144 145..239 240..255	OFF from minimum to standard CCT STEP from standard to maximum OFF
5 ch	CW +/- correzione live del CCT STEP selezionato (= "zero point")	0..15 6..111 112..144 145..239 240..255	OFF from minimum to standard CCT STEP from standard to maximum OFF
6 ch	DELAY	See related table	
7 ch	FAN	0..255	from minimum to maximum
8 ch	STROBO & STORE	See related table	
9 ch	SERVICE	See related table	

16 bit	SPLIT		
	Function	DMX value	Description
1 ch	DIMMER	0..255	from OFF (0) to full (255)
2 ch	DIMMER FINE	0..255	from OFF (0) to full (255)
3 ch	WARM WHITE	0..255	from OFF (0) to full (255)
4 ch	WARM WHITE FINE	0..255	from OFF (0) to full (255)
5 ch	COLD WHITE	0..255	from OFF (0) to full (255)
6 ch	COLD WHITE FINE	0..255	from OFF (0) to full (255)
7 ch	DELAY	See related table	
8 ch	FAN	0..255	from minimum to maximum
9 ch	STROBO & STORE	See related table	
10 ch	SERVICE	See related table	

16 bit	THEATRE FULL		
	Function	DMX value	Description
1 ch	DIMMER	0..255	from OFF (0) to full (255)
2 ch	DIMMER FINE	0..255	from OFF (0) to full (255)
3 ch	CCT LINEAR	See related table	
4 ch	DELAY	See related table	
5 ch	FAN	0..255	from minimum to maximum
6 ch	STROBO & STORE	See related table	
7 ch	SERVICE	See related table	

RGBW

8 bit	EASY		
	Function	DMX value	Description
1 ch	DIMMER	0..255	from OFF (0) to full (255)
2 ch	CCT PRESET	See related table	
3 ch	COLOUR PRESET	See related table	

Note: CCT PRESET has priority over COLOUR PRESET

8 bit	HSI		
	Function	DMX value	Description
1 ch	DIMMER	0..255	from OFF (0) to full (255)
2 ch	HUE	0..255	Sequence: R, R+G, G, G+B, B, B+R, R
3 ch	HUE FINE	0..255	Selection of the colour - fine
4 ch	SATURATION	0..255	from OFF (0) to full (255) → to dim the channel of CCT LINEAR
6 ch	STROBO & STORE	See related table	
7 ch	SERVICE	See related table	

8 bit	CMY		
	Function	DMX value	Description
1 ch	DIMMER	0..255	from OFF (0) to full (255)
2 ch	CYAN	0..255	from OFF (0) to full (255)
3 ch	MAGENTA	0..255	from OFF (0) to full (255)
4 ch	YELLOW	0..255	from OFF (0) to full (255)
5 ch	STROBO & STORE	See related table	
6 ch	SERVICE	See related table	

8 bit	RGBW		
	Function	DMX value	Description
1 ch	DIMMER	0..255	from OFF (0) to full (255)
2 ch	RED	0..255	from OFF (0) to full (255)
3 ch	GREEN	0..255	from OFF (0) to full (255)
4 ch	BLUE	0..255	from OFF (0) to full (255)
5 ch	WHITE	0..255	from OFF (0) to full (255)
6 ch	CCT PRESET	See related table	
7 ch	COLOUR PRESET	See related table	
8 ch	STROBO & STORE	See related table	
9 ch	SERVICE	See related table	

16 bit	FULL		
	Function	DMX value	Description
1 ch	DIMMER	0..255	from OFF (0) to full (255)
2 ch	DIMMER FINE	0..255	from OFF (0) to full (255)
3 ch	RED	0..255	from OFF (0) to full (255)
4 ch	RED FINE	0..255	from OFF (0) to full (255)
5 ch	GREEN	0..255	from OFF (0) to full (255)
6 ch	GREEN FINE	0..255	from OFF (0) to full (255)
7 ch	BLUE	0..255	from OFF (0) to full (255)
8 ch	BLUE FINE	0..255	from OFF (0) to full (255)
9 ch	WHITE	0..255	from OFF (0) to full (255)
10 ch	WHITE FINE	0..255	from OFF (0) to full (255)
11 ch	COLOUR PRESET	See related table	
12 ch	CCT PRESET	See related table	
13 ch	DELAY	See related table	
14 ch	FAN	0..255	from minimum to maximum
15 ch	STROBO & STORE	See related table	
16 ch	SERVICE	See related table	

6 COLOURS

8 bit	EASY		
	Function	DMX value	Description
1 ch	DIMMER	0..255	from OFF (0) to full (255)
2 ch	ROSCO FILTERS **Mark-II**	See related table	
3 ch	LEE FILTERS **Mark-II**	See related table	
4 ch	CCT PRESET	See related table	

Note: CCT PRESET has priority over COLOUR PRESET

8 bit	HSIC		
	Function	DMX value	Description
1 ch	DIMMER	0..255	from OFF (0) to full (255)
2 ch	HUE	0..255	Sequence: R, R+L, R+G+L, G+L, G, G+C, G+B+C, B+C, B, B+A, R+B+A, R+A, R
3 ch	HUE FINE	0..255	Selection of the colour - fine
4 ch	SATURATION	0..255	from OFF (0) to full (255) → to dim the channel of CCT LINEAR
5 ch	CCT LINEAR	See related table	
6 ch	STROBO & STORE	See related table	
7 ch	SERVICE	See related table	

8 bit	RGBACL		
	Function	DMX value	Description
1 ch	DIMMER	0..255	from OFF (0) to full (255)
2 ch	RED	0..255	from OFF (0) to full (255)
3 ch	GREEN	0..255	from OFF (0) to full (255)
4 ch	BLUE	0..255	from OFF (0) to full (255)
5 ch	AMBER	0..255	from OFF (0) to full (255)
6 ch	CYAN	0..255	from OFF (0) to full (255)
7 ch	LIME	0..255	from OFF (0) to full (255)
8 ch	STROBO & STORE	See related table	
9 ch	SERVICE	See related table	

16 bit	STUDIO		
	Function	DMX value	Description
1 ch	DIMMER	0..255	from OFF (0) to full (255)
2 ch	DIMMER FINE	0..255	from OFF (0) to full (255)
3 ch	RED	0..255	from OFF (0) to full (255)
4 ch	RED FINE	0..255	from OFF (0) to full (255)
5 ch	GREEN	0..255	from OFF (0) to full (255)
6 ch	GREEN FINE	0..255	from OFF (0) to full (255)
7 ch	BLUE	0..255	from OFF (0) to full (255)
8 ch	BLUE FINE	0..255	from OFF (0) to full (255)
9 ch	AMBER	0..255	from OFF (0) to full (255)
10 ch	AMBER FINE	0..255	from OFF (0) to full (255)
11 ch	CYAN	0..255	from OFF (0) to full (255)
12 ch	CYAN FINE	0..255	from OFF (0) to full (255)
13 ch	LIME	0..255	from OFF (0) to full (255)
14 ch	LIME FINE	0..255	from OFF (0) to full (255)
15 ch	ROSCO FILTERS **Mark-II**	See related table	
16 ch	LEE FILTERS **Mark-II**	See related table	
17 ch	CCT STEPS	See related table	
18 ch	GREEN +/-	0..15 16..126 127..144 145..255	OFF MINUS GREEN - ZERO POINT-CENTER PLUS GREEN +
19 ch	DELAY	See related table	
20 ch	FAN	0..255	from minimum to maximum
21 ch	STROBO & STORE	See related table	
22 ch	SERVICE	See related table	
23 ch	FREE 1 **Mark-II**	(for future use)	
24ch	FREE 2 **Mark-II**	(for future use)	

16 bit	THEATRE		
	Function	DMX value	Description
1 ch	DIMMER	0..255	from OFF (0) to full (255)
2 ch	DIMMER FINE	0..255	from OFF (0) to full (255)
3 ch	RED	0..255	from OFF (0) to full (255)
4 ch	RED FINE	0..255	from OFF (0) to full (255)
5 ch	GREEN	0..255	from OFF (0) to full (255)
6 ch	GREEN FINE	0..255	from OFF (0) to full (255)
7 ch	BLUE	0..255	from OFF (0) to full (255)
8 ch	BLUE FINE	0..255	from OFF (0) to full (255)
9 ch	AMBER	0..255	from OFF (0) to full (255)
10 ch	AMBER FINE	0..255	from OFF (0) to full (255)
11 ch	CYAN	0..255	from OFF (0) to full (255)
12 ch	CYAN FINE	0..255	from OFF (0) to full (255)
13 ch	LIME	0..255	from OFF (0) to full (255)
14 ch	LIME FINE	0..255	from OFF (0) to full (255)
15 ch	ROSCO FILTERS **Mark-II**	See related table	
16 ch	LEE FILTERS **Mark-II**	See related table	
17 ch	SATURATION	0..255	from OFF (0) to full (255) → to dim the channel of CCT LINEAR
18 ch	CCT LINEAR	See related table	
19 ch	GREEN +/-	0..15 16..126 127..144 145..255	OFF MINUS GREEN - ZERO POINT - CENTER PLUS GREEN +
20 ch	DELAY	See related table	
21 ch	FAN	0..255	from minimum to maximum
22 ch	STROBO & STORE	See related table	
23 ch	SERVICE	See related table	
24 ch	FREE 1 **Mark-II**	(for future use)	
25 ch	FREE 2 **Mark-II**	(for future use)	

Note: CCT LINEAR has priority over COLOUR PRESET has priority over manual selected colours (from channel 3 to 14)

16 bit	RGBACL **Mark-II**		
	Function	DMX value	Description
1 ch	DIMMER	0..255	from OFF (0) to full (255)
2 ch	DIMMER FINE	0..255	from OFF (0) to full (255)
3 ch	RED	0..255	from OFF (0) to full (255)
4 ch	RED FINE	0..255	from OFF (0) to full (255)
5 ch	GREEN	0..255	from OFF (0) to full (255)
6 ch	GREEN FINE	0..255	from OFF (0) to full (255)
7 ch	BLUE	0..255	from OFF (0) to full (255)
8 ch	BLUE FINE	0..255	from OFF (0) to full (255)
9 ch	AMBER	0..255	from OFF (0) to full (255)
10 ch	AMBER FINE	0..255	from OFF (0) to full (255)
11 ch	CYAN	0..255	from OFF (0) to full (255)
12 ch	CYAN FINE	0..255	from OFF (0) to full (255)
13 ch	LIME	0..255	from OFF (0) to full (255)
14 ch	LIME FINE	0..255	from OFF (0) to full (255)

8 COLOURS

8 bit	EASY		
	Function	DMX value	Description
1 ch	DIMMER	0..255	from OFF (0) to full (255)
2 ch	ROSCO FILTERS Mark-II	See related table	
3 ch	LEE FILTERS Mark-II	See related table	
4 ch	CCT PRESET	See related table	

Note: CCT PRESET has priority over COLOUR PRESET

8 bit	HSIC		
	Function	DMX value	Description
1 ch	DIMMER	0..255	from OFF (0) to full (255)
2 ch	HUE	0..255	Sequence: R, R+L, R+G+L, G+L, G, G+C, G+B+C, B+C, B, B+A, R+B+A, R+A, R
3 ch	HUE FINE	0..255	Selection of the colour - fine
4 ch	SATURATION	0..255	from OFF (0) to full (255) → to dim the channel of CCT LINEAR
5 ch	CCT LINEAR	See related table	
6 ch	STROBO & STORE	See related table	
7 ch	SERVICE	See related table	

8 bit	RGBACL+WW+CW		
	Function	DMX value	Description
1 ch	DIMMER	0..255	from OFF (0) to full (255)
2 ch	RED	0..255	from OFF (0) to full (255)
3 ch	GREEN	0..255	from OFF (0) to full (255)
4 ch	BLUE	0..255	from OFF (0) to full (255)
5 ch	AMBER	0..255	from OFF (0) to full (255)
6 ch	CYAN	0..255	from OFF (0) to full (255)
7 ch	LIME	0..255	from OFF (0) to full (255)
8 ch	WARM WHITE	0..255	from OFF (0) to full (255)
9 ch	COLD WHITE	0..255	from OFF (0) to full (255)
10 ch	STROBO & STORE	See related table	
11 ch	SERVICE	See related table	

16 bit	RGBACL+WW+CW		
	Function	DMX value	Description
1 ch	DIMMER	0..255	from OFF (0) to full (255)
2 ch	DIMMER FINE	0..255	from OFF (0) to full (255)
3 ch	RED	0..255	from OFF (0) to full (255)
4 ch	RED FINE	0..255	from OFF (0) to full (255)
5 ch	GREEN	0..255	from OFF (0) to full (255)
6 ch	GREEN FINE	0..255	from OFF (0) to full (255)
7 ch	BLUE	0..255	from OFF (0) to full (255)
8 ch	BLUE FINE	0..255	from OFF (0) to full (255)
9 ch	AMBER	0..255	from OFF (0) to full (255)
10 ch	AMBER FINE	0..255	from OFF (0) to full (255)
11 ch	CYAN	0..255	from OFF (0) to full (255)
12 ch	CYAN FINE	0..255	from OFF (0) to full (255)
13 ch	LIME	0..255	from OFF (0) to full (255)
14 ch	LIME FINE	0..255	from OFF (0) to full (255)
15 ch	WARM WHITE	0..255	from OFF (0) to full (255)
16 ch	WARM WHITE FINE	0..255	from OFF (0) to full (255)
17 ch	COLD WHITE	0..255	from OFF (0) to full (255)
18 ch	COLD WHITE FINE	0..255	from OFF (0) to full (255)

16 bit	STUDIO		
	Function	DMX value	Description
1 ch	DIMMER	0..255	from OFF (0) to full (255)
2 ch	DIMMER FINE	0..255	from OFF (0) to full (255)
3 ch	RED	0..255	from OFF (0) to full (255)
4 ch	RED FINE	0..255	from OFF (0) to full (255)
5 ch	GREEN	0..255	from OFF (0) to full (255)
6 ch	GREEN FINE	0..255	from OFF (0) to full (255)
7 ch	BLUE	0..255	from OFF (0) to full (255)
8 ch	BLUE FINE	0..255	from OFF (0) to full (255)
9 ch	AMBER	0..255	from OFF (0) to full (255)
10 ch	AMBER FINE	0..255	from OFF (0) to full (255)
11 ch	CYAN	0..255	from OFF (0) to full (255)
12 ch	CYAN FINE	0..255	from OFF (0) to full (255)
13 ch	LIME	0..255	from OFF (0) to full (255)
14 ch	LIME FINE	0..255	from OFF (0) to full (255)
15 ch	WARM WHITE	0..255	from OFF (0) to full (255)
16 ch	WARM WHITE FINE	0..255	from OFF (0) to full (255)
17 ch	COLD WHITE	0..255	from OFF (0) to full (255)
18 ch	COLD WHITE FINE	0..255	from OFF (0) to full (255)
19 ch	ROSCO FILTERS Mark-II	See related table	
20 ch	LEE FILTERS Mark-II	See related table	
21 ch	CCT STEPS	See related table	
22 ch	GREEN +/-	0..15 16..126 127..144 145..255	OFF MINUS GREEN - ZERO POINT - CENTER PLUS GREEN +
23 ch	DELAY	See related table	
24 ch	FAN	0..255	from minimum to maximum
25 ch	STROBO & STORE	See related table	
26 ch	SERVICE	See related table	
27 ch	FREE 1 Mark-II	(for future use)	
28 ch	FREE 2 Mark-II	(for future use)	

16 bit	THEATRE		
	Function	DMX value	Description
1 ch	DIMMER	0..255	from OFF (0) to full (255)
2 ch	DIMMER FINE	0..255	from OFF (0) to full (255)
3 ch	RED	0..255	from OFF (0) to full (255)
4 ch	RED FINE	0..255	from OFF (0) to full (255)
5 ch	GREEN	0..255	from OFF (0) to full (255)
6 ch	GREEN FINE	0..255	from OFF (0) to full (255)
7 ch	BLUE	0..255	from OFF (0) to full (255)
8 ch	BLUE FINE	0..255	from OFF (0) to full (255)
9 ch	AMBER	0..255	from OFF (0) to full (255)
10 ch	AMBER FINE	0..255	from OFF (0) to full (255)
11 ch	CYAN	0..255	from OFF (0) to full (255)
12 ch	CYAN FINE	0..255	from OFF (0) to full (255)
13 ch	LIME	0..255	from OFF (0) to full (255)
14 ch	LIME FINE	0..255	from OFF (0) to full (255)
15 ch	WARM WHITE	0..255	from OFF (0) to full (255)
16 ch	WARM WHITE FINE	0..255	from OFF (0) to full (255)
17 ch	COLD WHITE	0..255	from OFF (0) to full (255)
18 ch	COLD WHITE FINE	0..255	from OFF (0) to full (255)
19 ch	ROSCO FILTERS Mark-II	See related table	
20 ch	LEE FILTERS Mark-II	See related table	
21 ch	SATURATION	0..255	from OFF (0) to full (255) → to dim the channel of CCT LINEAR
22 ch	CCT LINEAR	See related table	
23 ch	GREEN +/-	0..15 16..126 127..144 145..255	OFF MINUS GREEN - ZERO POINT - CENTER PLUS GREEN +
24 ch	DELAY	See related table	
25 ch	FAN	0..255	from minimum to maximum
26 ch	STROBO & STORE	See related table	
27 ch	SERVICE	See related table	
28 ch	FREE 1 Mark-II	(for future use)	
29 ch	FREE 2 Mark-II	(for future use)	

Note: CCT LINEAR has priority over COLOUR PRESET has priority over manual selected colours (from channel 3 to 14)

Part 5. Related tables

SERVICE CHANNEL

This channel allows to change via console all the settings that are normally set manually from the STAND ALONE and OPTIONS menu of the fixture

					White	White	TW	RGBW	6C	8C
SERVICE 1 (RGBW, 6C, 8C)	STAND ALONE (here you create)	CUSTOM PRESETS	0..5 6..18 19..31 32..44 45..57 58..70 71..83 84..96 97..109 110..122 123..135 136..148 149..161 162..174 175..187 188..200 201..213 214..226 227..239 240..255	OFF CUSTOM PRESET 1 CUSTOM PRESET 2 CUSTOM PRESET 3 CUSTOM PRESET 4 CUSTOM PRESET 5 CUSTOM PRESET 6 CUSTOM PRESET 7 CUSTOM PRESET 8 CUSTOM PRESET 9 CUSTOM PRESET 10 CUSTOM PRESET 11 **Mark-II** CUSTOM PRESET 12 **Mark-II** CUSTOM PRESET 13 **Mark-II** CUSTOM PRESET 14 **Mark-II** CUSTOM PRESET 15 **Mark-II** CUSTOM PRESET 16 **Mark-II** CUSTOM PRESET 17 **Mark-II** CUSTOM PRESET 18 **Mark-II** CUSTOM PRESET 19 **Mark-II**	-	-	-	YES	YES	YES
SERIVCE (White, TW) or SERVICE 2 (RGBW, 6C, 8C)	OPTIONS (here you set)		0..5	INACTIVE	-	-	-	YES	YES	YES
		LED DELAY	6..11 12..17 18..23 24..29 30..35 36..41 42..47 48..53 54..59 60..65 66..71	OFF 50 ms 100 ms 240 ms 400 ms 600 ms 800 ms 1000 ms (default) 1200 ms 1600 ms 2000 ms	-	YES	YES	YES	YES	YES
		DIMMING CURVE	72..77 78..81 82..83 84..85 86..87 88.89	LINEAR QUADRATIC S **Mark-II** HALO (default) GAMMA 2.6 **Mark-II** GAMMA 2.8 **Mark-II**	-	YES	YES	YES	YES	YES
		OUTPUT FREQUENCY	90..95 96..101 102..107 108..113 114..119 120..125 126..131 132..137 138..143	600 Hz 900 Hz 1200 Hz (default) 2100 Hz 4200 Hz 6000 Hz 10200 Hz 15600 Hz 19800 Hz	-	YES	YES	YES	YES	YES
		LED BOOST	144..149 150..155	ON OFF (default)	-	YES	YES	YES	YES	YES
		FAN MODE	156..161 162..167 168..173	AUTO (default) STANDARD SILENT	-	YES	YES	YES	YES	YES
		DISPLAY ROTATION DISPLAY ON/FF	174..179 180..185 186..191 192..197	STANDARD (default) ROTATED OFF ON (default)	-	YES	YES	YES	YES	YES
		LED CALIBRATION	198..203	COLOUR CALIBRATION (for all) NO FUNCTION (for White 300-700)	-	YES	YES	YES	YES	YES
		DEFAULT SETTINGS	204..209	DEFAULT SETTINGS	-	YES	YES	YES	YES	YES
		(for future use)	210..255	FREE	-	YES	YES	YES	YES	YES

STROBE & STORE CHANNEL

This channel allows to save what has been created/set in the related SERVICE channel

				White	White	TW	RGBW	6C	8C
STROBE & STORE	STROBE	0 1..150 151..200	OFF from slow (3,86 s) to fast (30 ms) OFF	-	YES	YES	YES	YES	YES
	STORE 1	201..210 211..230	Once created the desired CUSTOM PRESET, keep on hold for 5 seconds to store the new value. OFF	-	-	-	YES	YES	YES
	STORE 2	231..240 241..255	Once set the desired OPTION, keep on hold for 5 seconds to store the new value. OFF	-	YES	YES	YES	YES	YES

CCT CHANNEL

		TW		RGBW	6C			8C		
		LINEAR	PRESET	PRESET	LINEAR	STEP	PRESET	LINEAR	STEP	PRESET
NONE				0..15	-	0.. 4	0..4	-	0.. 4	0..4
1500K					0.. 0..	5.. 7	5.. 11	0.. 0..	5.. 7	5.. 11
1500K-1600K					1.. 7..	8.. 11	-	1.. 7..	8.. 11	-
1600K					8.. 8..	12.. 14	12.. 18	8.. 8..	12.. 14	12.. 18
1600K-1700K					9.. 15	15.. 18	-	9.. 15	15.. 18	-
1700K					16.. 16	19.. 21	19.. 25	16.. 16	19.. 21	19.. 25
1700K-1800K					17.. 23	22.. 25	-	17.. 23	22.. 25	-
1800K					24.. 24	26.. 28	26.. 32	24.. 24	26.. 28	26.. 32
1800K-1900K					25.. 31	29.. 32	-	25.. 31	29.. 32	-
1900K					32.. 32	33.. 35	33.. 39	32.. 32	33.. 35	33.. 39
1900K-2000K					33.. 39	36.. 39	-	33.. 39	36.. 39	-
2000K					40.. 40	40.. 42	40.. 46	40.. 40	40.. 42	40.. 46
2000K-2100K		-	-	-	41.. 47	43.. 46	-	41.. 47	43.. 46	-
2100K					48.. 48	47.. 49	47.. 53	48.. 48	47.. 49	47.. 53
2100K-2200K					49.. 55	50.. 53	-	49.. 55	50.. 53	-
2200K					56.. 56	54.. 56	54.. 60	56.. 56	54.. 56	54.. 60
2200K-2300K					57.. 63	57.. 60	-	57.. 63	57.. 60	-
2300K					64.. 64	61.. 63	61.. 67	64.. 64	61.. 63	61.. 67
2300K-2400K					65.. 71	64.. 67	-	65.. 71	64.. 67	-
2400K					72.. 72	68.. 70	68.. 74	72.. 72	68.. 70	68.. 74
2400K-2500K					73.. 79	71.. 74	-	73.. 79	71.. 74	-
2500K					80.. 80	75.. 77	75.. 81	80.. 80	75.. 77	75.. 81
2500K-2600K					81.. 86	78.. 81	-	81.. 86	78.. 81	-
2600K					87.. 87	82.. 84	82.. 88	87.. 87	82.. 84	82.. 88
2600K-2700K					88.. 93	85.. 88	-	88.. 93	85.. 88	-
2700K		0	0..35	16..45	94.. 94	89.. 91	89.. 95	94.. 94	89.. 91	89.. 95
2700K-3000K	2700K-2800K	1..41	-	-	95.. 100..	92.. 95	-	95.. 100..	92.. 95	-
	2800K				101.. 101	96.. 98	96.. 102	101.. 101	96.. 98	96.. 102
	2800K-2900K				102.. 107	99.. 102	-	102.. 107	99.. 102	-
	2900K				108.. 108	103.. 105	103.. 109	108.. 108	103.. 105	103.. 109
	2900K-3000K				109.. 114	106.. 109	-	109.. 114	106.. 109	-
3000K		42	36..70	46..75	115.. 115	110.. 112	110.. 116	115.. 115	110.. 112	110.. 116
3000K-3200K	3000K-3100K	43..83	-	-	116.. 121	113.. 116	-	116.. 121	113.. 116	-
	3100K				122.. 122	117.. 119	117.. 123	122.. 122	117.. 119	117.. 123
	3100K-3200K				123.. 128	120.. 123	-	123.. 128	120.. 123	-
3200K (default)		84	71..105	76..105	129.. 129	124.. 126	124.. 130	129.. 129	124.. 126	124.. 130
3200K-3500K	3200K-3300K	85..125	-	-	130.. 135	127.. 130	-	130.. 135	127.. 130	-
	3300K				136.. 136	131.. 133	131.. 137	136.. 136	131.. 133	131.. 137
	3300K-3400K				137.. 142	134.. 137	-	137.. 142	134.. 137	-
	3400K				143.. 143	138.. 140	138.. 144	143.. 143	138.. 140	138.. 144
	3400K-3500K				144.. 149	141.. 144	-	144.. 149	141.. 144	-
3500K		126	106..140	106..135	150.. 150	145.. 147	145.. 151	150.. 150	145.. 147	145.. 151
3500K-4000K		127..168	-	-	151.. 156	148.. 151	-	151.. 156	148.. 151	-
4000K		169	141..175	136..165	157.. 157	152.. 154	152.. 158	157.. 157	152.. 154	152.. 158
4000K-5600K	4000K-5000K	170..211	-	-	158.. 163	155.. 158	-	158.. 163	155.. 158	-
	5000K				164.. 164	159.. 161	159.. 165	164.. 164	159.. 161	159.. 165
	5000K-5600K				165.. 170	162.. 165	-	165.. 170	162.. 165	-
5600K		212	176..210	166..195	171.. 171	166.. 168	166.. 172	171.. 171	166.. 168	166.. 172
5600K-6500K	5600K-6000K	213..254	-	-	172.. 177	169.. 172	-	172.. 177	169.. 172	-
	6000K				178.. 178	173.. 175	173.. 179	178.. 178	173.. 175	173.. 179
	6000K-6500K				179.. 184	176.. 179	-	179.. 184	176.. 179	-
6500K		255	211..225	196..225	185.. 185	180.. 182	180.. 186	185.. 185	180.. 182	180.. 186
6500K-8000K				-	186.. 191	183.. 186	-	186.. 191	183.. 186	-
8000K				226..255	192.. 192	187.. 189	187.. 193	192.. 192	187.. 189	187.. 193
8000K-10000K					193.. 198	190.. 193	-	193.. 198	190.. 193	-
10000K					199.. 199	194.. 196	194.. 200	199.. 199	194.. 196	194.. 200
10000K-12000K					200.. 205	197.. 200	-	200.. 205	197.. 200	-
12000K					206.. 206	201.. 203	201.. 207	206.. 206	201.. 203	201.. 207
12000K-14000K					207.. 212	204.. 207	-	207.. 212	204.. 207	-
14000K					213.. 213	208.. 210	208.. 214	213.. 213	208.. 210	208.. 214
14000K-15000K					214.. 219	211.. 214	-	214.. 219	211.. 214	-
15000K					220.. 220	215.. 217	215.. 221	220.. 220	215.. 217	215.. 221
15000K-16000K		-	-	-	221.. 226	218.. 221	-	221.. 226	218.. 221	-
16000K					227.. 227	222.. 224	222.. 228	227.. 227	222.. 224	222.. 228
16000K-17000K					228.. 233	225.. 228	-	228.. 233	225.. 228	-
17000K					234.. 234	229.. 231	229.. 235	234.. 234	229.. 231	229.. 235
17000K-180000K					235.. 240	232.. 235	-	235.. 240	232.. 235	-
18000K					241.. 241	236.. 239	236.. 242	241.. 241	236.. 239	236.. 242
18000K-190000K					242.. 247	240.. 243	-	242.. 247	240.. 243	-
19000K					248.. 248	244.. 247	243.. 249	248.. 248	244.. 247	243.. 249
19000K-20000K					249.. 254	248.. 251	-	249.. 254	248.. 251	-
20000K					255.. 255	252.. 255	250.. 255	255.. 255	252.. 255	250.. 255

ROSCO FILTERS CHANNEL MARK-II

										White	White	TW	RGBW	6C	8C
STANDARD	000	NONE	060	ROSCO R0077	120	ROSCO R4515	180	ROSCO R4730		-	-	-	-	YES	YES
	001	ROSCO R0384	061	ROSCO R0075	121	ROSCO R4530	181	ROSCO R0037							
	002	ROSCO R0383	062	ROSCO R0376	122	ROSCO R4560	182	ROSCO R3308							
	003	ROSCO R0085	063	ROSCO R0071	123	ROSCO R0096	183	ROSCO R3309							
	004	ROSCO R0083	064	ROSCO R0092	124	ROSCO R0012	184	ROSCO R4715							
	005	ROSCO R0079	065	ROSCO R3316	125	ROSCO R4590	185	ROSCO R0038							
	006	ROSCO R0080	066	ROSCO R3315	126	ROSCO R0010	186	ROSCO R3313							
	007	ROSCO R2006	067	ROSCO R0087	127	ROSCO R0310	187	ROSCO R0333							
	008	ROSCO R3220	068	ROSCO R3304	128	ROSCO R0313	188	ROSCO R3314							
	009	ROSCO R2007	069	ROSCO R0088	129	ROSCO R0312	189	ROSCO R3318							
	010	ROSCO R0084	070	ROSCO R4415	130	ROSCO R0014	190	ROSCO R0351							
	011	ROSCO R0078	071	ROSCO R0388	131	ROSCO R0011	191	ROSCO R0054							
	012	ROSCO R0081	072	ROSCO R4430	132	ROSCO R2003	192	ROSCO R0051							
	013	ROSCO R0068	073	ROSCO R0086	133	ROSCO R0015	193	ROSCO R0052							
	014	ROSCO R0368	074	ROSCO R0089	134	ROSCO R3441	194	ROSCO R4915							
	015	ROSCO R0069	075	ROSCO R0389	135	ROSCO R3411	195	ROSCO R4930							
	016	ROSCO R0065	076	ROSCO R0386	136	ROSCO R0316	196	ROSCO R0356							
	017	ROSCO R0067	077	ROSCO R4460	137	ROSCO R3401	197	ROSCO R0057							
	018	ROSCO R0367	078	ROSCO R4490	138	ROSCO R3407	198	ROSCO R4960							
	019	ROSCO R0064	079	ROSCO R2004	139	ROSCO R0020	199	ROSCO R0058							
	020	ROSCO R0375	080	ROSCO R0090	140	ROSCO R2002	200	ROSCO R0357							
	021	ROSCO R0370	081	ROSCO R0091	141	ROSCO R0317	201	ROSCO R0059							
	022	ROSCO R0366	082	ROSCO R0122	142	ROSCO R0318	202	ROSCO R0336							
	023	ROSCO R0369	083	ROSCO R0126	143	ROSCO R0021	203	ROSCO R4760							
	024	ROSCO R0072	084	ROSCO R0393	144	ROSCO R0023	204	ROSCO R0044							
	025	ROSCO R0062	085	ROSCO R0094	145	ROSCO R0041	205	ROSCO R0346							
	026	ROSCO R0063	086	ROSCO R3406	146	ROSCO R0040	206	ROSCO R0349							
	027	ROSCO R0060	087	ROSCO R3405	147	ROSCO R0022	207	ROSCO R0344							
	028	ROSCO R3206	088	ROSCO R0099	148	ROSCO R0019	208	ROSCO R0039							
	029	ROSCO R0372	089	ROSCO R0017	149	ROSCO R0032	209	ROSCO R0047							
	030	ROSCO R0373	090	ROSCO R0321	150	ROSCO R4690	210	ROSCO R0348							
	031	ROSCO R3208	091	ROSCO R0018	151	ROSCO R0042	211	ROSCO R0049							
	032	ROSCO R4315	092	ROSCO R0303	152	ROSCO R0127	212	ROSCO R0048							
	033	ROSCO R3216	093	ROSCO R0030	153	ROSCO R0024	213	ROSCO R0347							
	034	ROSCO R0053	094	ROSCO R4660	154	ROSCO R0325	214	ROSCO R4990							
	035	ROSCO R3204	095	ROSCO R3310	155	ROSCO R0025	215	ROSCO R0358							
	036	ROSCO R0360	096	ROSCO R0031	156	ROSCO R2001	216	ROSCO R0056							
	037	ROSCO R4215	097	ROSCO R0034	157	ROSCO R0324	217	ROSCO R0377							
	038	ROSCO R3203	098	ROSCO R0331	158	ROSCO R0026	218	ROSCO R0385							
	039	ROSCO R0362	099	ROSCO R4630	159	ROSCO R0120	219	ROSCO R2009							
	040	ROSCO R0371	100	ROSCO R0304	160	ROSCO R0124	220	ROSCO R0353							
	041	ROSCO R0364	101	ROSCO R0003	161	ROSCO R0027	221	ROSCO R0055							
	042	ROSCO R3202	102	ROSCO R4615	162	ROSCO R0050	222	ROSCO R4230							
	043	ROSCO R3218	103	ROSCO R0305	163	ROSCO R4890	223	ROSCO R0355							
	044	ROSCO R0365	104	ROSCO R0005	164	ROSCO R0332	224	ROSCO R0378							
	045	ROSCO R0061	105	ROSCO R0016	165	ROSCO R0342	225	ROSCO R4260							
	046	ROSCO R4330	106	ROSCO R3408	166	ROSCO R0045	226	ROSCO R0359							
	047	ROSCO R0363	107	ROSCO R0009	167	ROSCO R0046	227	ROSCO R4290							
	048	ROSCO R0066	108	ROSCO R0002	168	ROSCO R0339	228	ROSCO R0082							
	049	ROSCO R0070	109	ROSCO R0013	169	ROSCO R2010	229	ROSCO R0074							
	050	ROSCO R4360	110	ROSCO R3442	170	ROSCO R4790	230	ROSCO R0381							
	051	ROSCO R4390	111	ROSCO R0008	171	ROSCO R0043	231	ROSCO R2008							
	052	ROSCO R0073	112	ROSCO R3409	172	ROSCO R343	232	ROSCO R0121							
	053	ROSCO R2005	113	ROSCO R3443	173	ROSCO R0036	233	ROSCO R0125							
	054	ROSCO R0374	114	ROSCO R0302	174	ROSCO R4860	234	ROSCO R0382							
	055	ROSCO R0093	115	ROSCO R3444	175	ROSCO R4830	235	ROSCO R0397							
	056	ROSCO R0392	116	ROSCO R3317	176	ROSCO R0035	236	ROSCO R3114							
	057	ROSCO R0095	117	ROSCO R0006	177	ROSCO R0337									
	058	ROSCO R0395	118	ROSCO R3410	178	ROSCO R4815									
	059	ROSCO R0076	119	ROSCO R0007	179	ROSCO R0033									
CUSTOM	237	CUSTOM 1	242	CUSTOM 6	247	CUSTOM 11	252	CUSTOM 16		-	-	-	-	YES	YES
	238	CUSTOM 2	243	CUSTOM 7	248	CUSTOM 12	253	CUSTOM 17							
	239	CUSTOM 3	244	CUSTOM 8	249	CUSTOM 13	254	CUSTOM 18							
	240	CUSTOM 4	245	CUSTOM 9	250	CUSTOM 14	255	CUSTOM 19							
	241	CUSTOM 5	246	CUSTOM 10	251	CUSTOM 15									

LEE FILTERS CHANNEL MARK-II

									White	White	TW	RGBW	6C	8C
STANDARD	000	NONE	061	LEE 131	122	LEE 232	183	LEE 787	-	-	-	-	YES	YES
	001	LEE 071	062	LEE 219	123	LEE 147	184	LEE 046						
	002	LEE 713	063	LEE 241	124	LEE 776	185	LEE 113						
	003	LEE 120	064	LEE 242	125	LEE 604	186	LEE 332						
	004	LEE 363	065	LEE 728	126	LEE 207	187	LEE 748						
	005	LEE 085	066	LEE 504	127	LEE 441	188	LEE 127						
	006	LEE 119	067	LEE 730	128	LEE 204	189	LEE 148						
	007	LEE 716	068	LEE 731	129	LEE 236	190	LEE 157						
	008	LEE 195	069	LEE 213	130	LEE 744	191	LEE 192						
	009	LEE 715	070	LEE 245	131	LEE 285	192	LEE 111						
	010	LEE 723	071	LEE 733	132	LEE 013	193	LEE 036						
	011	LEE 721	072	LEE 244	133	LEE 009	194	LEE 107						
	012	LEE 722	073	LEE 138	134	LEE 205	195	LEE 110						
	013	LEE 079	074	LEE 088	135	LEE 442	196	LEE 035						
	014	LEE 714	075	LEE 505	136	LEE 764	197	LEE 247						
	015	LEE 132	076	LEE 243	137	LEE 103	198	LEE 248						
	016	LEE 068	077	LEE 121	138	LEE 206	199	LEE 249						
	017	LEE 075	078	LEE 738	139	LEE 763	200	LEE 169						
	018	LEE 197	079	LEE 122	140	LEE 443	201	LEE 136						
	019	LEE 712	080	LEE 089	141	LEE 223	202	LEE 794						
	020	LEE 525	081	LEE 139	142	LEE 279	203	LEE 170						
	021	LEE 200	082	LEE 090	143	LEE 003	204	LEE 704						
	022	LEE 719	083	LEE 736	144	LEE 444	205	LEE 052						
	023	LEE 500	084	LEE 124	145	LEE 246	206	LEE 702						
	024	LEE 366	085	LEE 735	146	LEE 007	207	LEE 137						
	025	LEE 283	086	LEE 327	147	LEE 513	208	LEE 194						
	026	LEE 174	087	LEE 740	148	LEE 514	209	LEE 058						
	027	LEE 201	088	LEE 643	149	LEE 010	210	LEE 180						
	028	LEE 281	089	LEE 642	150	LEE 100	211	LEE 701						
	029	LEE 501	090	LEE 741	151	LEE 101	212	LEE 345						
	030	LEE 708	091	LEE 746	152	LEE 767	213	LEE 703						
	031	LEE 502	092	LEE 511	153	LEE 104	214	LEE 002						
	032	LEE 503	093	LEE 653	154	LEE 765	215	LEE 795						
	033	LEE 218	094	LEE 789	155	LEE 102	216	LEE 328						
	034	LEE 278	095	LEE 512	156	LEE 550	217	LEE 048						
	035	LEE 203	096	LEE 024	157	LEE 015	218	LEE 128						
	036	LEE 202	097	LEE 025	158	LEE 768	219	LEE 793						
	037	LEE 061	098	LEE 652	159	LEE 179	220	LEE 049						
	038	LEE 063	099	LEE 017	160	LEE 770	221	LEE 126						
	039	LEE 725	100	LEE 651	161	LEE 020	222	LEE 797						
	040	LEE 117	101	LEE 134	162	LEE 286	223	LEE 798						
	041	LEE 140	102	LEE 008	163	LEE 208	224	LEE 343						
	042	LEE 353	103	LEE 779	164	LEE 742	225	LEE 700						
	043	LEE 144	104	LEE 237	165	LEE 287	226	LEE 707						
	044	LEE 724	105	LEE 747	166	LEE 105	227	LEE 181						
	045	LEE 118	106	LEE 238	167	LEE 021	228	LEE 799						
	046	LEE 172	107	LEE 176	168	LEE 158	229	LEE 508						
	047	LEE 183	108	LEE 109	169	LEE 777	230	LEE 706						
	048	LEE 141	109	LEE 790	170	LEE 778	231	LEE 199						
	049	LEE 161	110	LEE 108	171	LEE 780	232	LEE 198						
	050	LEE 196	111	LEE 773	172	LEE 022	233	LEE 710						
	051	LEE 165	112	LEE 004	173	LEE 135	234	LEE 711						
	052	LEE 352	113	LEE 152	174	LEE 507	235	LEE 142						
	053	LEE 143	114	LEE 151	175	LEE 781	236	LEE 709						
	054	LEE 727	115	LEE 153	176	LEE 019	237	LEE 053						
	055	LEE 729	116	LEE 154	177	LEE 164	238	LEE 603						
	056	LEE 116	117	LEE 506	178	LEE 182	239	LEE 602						
	057	LEE 354	118	LEE 162	179	LEE 106	240	LEE 600						
	058	LEE 115	119	LEE 650	180	LEE 029	241	LEE 601						
	059	LEE 323	120	LEE 230	181	LEE 026								
	060	LEE 322	121	LEE 156	182	LEE 027								
CUSTOM	242	CUSTOM 1	247	CUSTOM 6	252	CUSTOM 11			-	-	-	-	YES	YES
	243	CUSTOM 2	248	CUSTOM 7	253	CUSTOM 12								
	244	CUSTOM 3	249	CUSTOM 8	254	CUSTOM 13								
	245	CUSTOM 4	250	CUSTOM 9	255	CUSTOM 14								
	246	CUSTOM 5	251	CUSTOM 10										

MANUAL PRESET / COLOUR / CCT MARK-II

		White	White	TW	RGBW	6C				8C			
						MANUAL PRESET	MANUAL COLOR		MANUAL CCT	MANUAL PRESET	MANUAL COLOR		MANUAL CCT
NONE		-	-	-	-	000..000	000..000		0..4	000..000	000..000		0..4
1500 K									5..11				5..11
1600 K									12..18				12..18
1700 K									19..25				19..25
1800 K									26..32				26..32
1900 K									33..39				33..39
2000 K									40..46				40..46
2100 K									47..53				47..53
2200 K									54..60				54..60
2300 K									61..67				61..67
2400 K									68..74				68..74
2500 K									75..81				75..81
2600 K									82..88				82..88
2700K						001..003			89..95	001..003			89..95
2800 K									96..102				96..102
2900 K									103..109				103..109
3000K						004..006			110..116	004..006			110..116
3100 K									117..123				117..123
3200K		-	-	-	-	007..009	-		124..130	007..009	-		124..130
3300 K									131..137				131..137
3400 K									138..144				138..144
3500K						010..012			145..151	010..012			145..151
4000K						013..015			152..158	013..015			152..158
5000 K									159..165				159..165
5600K						016..018			166..172	016..018			166..172
6000 K									173..179				173..179
6500K						019..021			180..186	019..021			180..186
8000K						022..024			187..193	022..024			187..193
10000 K									194..200				194..200
12000 K									201..207				201..207
14000 K									208..214				208..214
15000 K									215..221				215..221
16000 K									222..228				222..228
17000 K									229..235				229..235
18000 K									236..242				236..242
19000 K									243..249				243..249
20000 K									250..255				250..255
FULL WHITE		-	-	-	-	025..027		-	-	025..027		-	-
LEE 063	LEE 179					028..030	127..129	001..003	100..102		028..030	127..129	001..003	100..102	
LEE 117	LEE 105					031..033	130..132	004..006	103..105		031..033	130..132	004..006	103..105	
LEE 353	LEE 158					034..036	133..135	007..009	106..108		034..036	133..135	007..009	106..108	
LEE 172	LEE 778					037..039	136..138	010..012	109..111		037..039	136..138	010..012	109..111	
LEE 118	LEE 135					040..042	139..141	013..015	112..114		040..042	139..141	013..015	112..114	
LEE 141	LEE 019					043..045	142..144	016..018	115..117		043..045	142..144	016..018	115..117	
LEE 165	LEE 164					046..048	145..147	019..021	118..120		046..048	145..147	019..021	118..120	
LEE 068	LEE 106					049..051	148..150	022..024	121..123		049..051	148..150	022..024	121..123	
LEE 197	LEE 026					052..054	151..153	025..027	124..126		052..054	151..153	025..027	124..126	
LEE 132	LEE 046					055..057	154..156	028..030	127..129		055..057	154..156	028..030	127..129	
LEE 079	LEE 332					058..060	157..159	031..033	130..132		058..060	157..159	031..033	130..132	
LEE 715	LEE 793					061..063	160..162	034..036	133..135		061..063	160..162	034..036	133..135	
LEE 119	LEE 128					064..066	163..165	037..039	136..138		064..066	163..165	037..039	136..138	
LEE 120	LEE 111					067..069	166..168	040..042	139..141		067..069	166..168	040..042	139..141	
LEE 713	LEE 157					070..072	169..171	043..045	142..144		070..072	169..171	043..045	142..144	
LEE 071	LEE 148					073..075	172..174	046..048	145..147		073..075	172..174	046..048	145..147	
LEE 729	LEE 024	-	-	-	-	076..078	175..177	049..051	148..150	-	076..078	175..177	049..051	148..150	-
LEE 116	LEE 008					079..081	178..180	052..054	151..153		079..081	178..180	052..054	151..153	
LEE 115	LEE 134					082..084	181..183	055..057	154..156		082..084	181..183	055..057	154..156	
LEE 131	LEE 147					085..087	184..186	058..060	157..159		085..087	184..186	058..060	157..159	
LEE 323	LEE 004					088..090	187..189	061..063	160..162		088..090	187..189	061..063	160..162	
LEE 735	LEE 154					091..093	190..192	064..066	163..165		091..093	190..192	064..066	163..165	
LEE 090	LEE 169					094..096	193..195	067..069	166..168		094..096	193..195	067..069	166..168	
LEE 139	LEE 136					097..099	196..198	070..072	169..171		097..099	196..198	070..072	169..171	
LEE 089	LEE 170					100..102	199..201	073..075	172..174		100..102	199..201	073..075	172..174	
LEE 122	LEE 137					103..105	202..204	076..078	175..177		103..105	202..204	076..078	175..177	
LEE 738	LEE 058					106..108	205..207	079..081	178..180		106..108	205..207	079..081	178..180	
LEE 088	LEE 180					109..111	208..210	082..084	181..183		109..111	208..210	082..084	181..183	
LEE 138	LEE 126					112..114	211..213	085..087	184..186		112..114	211..213	085..087	184..186	
LEE 100	LEE 797					115..117	214..216	088..090	187..189		115..117	214..216	088..090	187..189	
LEE 010	LEE 798					118..120	217..219	091..093	190..192		118..120	217..219	091..093	190..192	
LEE 101	LEE 707					121..123	220..222	094..096	193..195		121..123	220..222	094..096	193..195	
LEE 104	LEE 181					124..126	223..225	097..099	196..198		124..126	223..225	097..099	196..198	
CUSTOM 1	CUSTOM 11					226..228		199..201	229..231		226..228		199..201	229..231	
CUSTOM 2	CUSTOM 12					229..231		202..204	232..234		229..231		202..204	232..234	
CUSTOM 3	CUSTOM 13					232..234		205..207	235..237		232..234		205..207	235..237	
CUSTOM 4	CUSTOM 14					235..237		208..210	238..240		235..237		208..210	238..240	
CUSTOM 5	CUSTOM 15					238..240		211..213	241..243		238..240		211..213	241..243	
CUSTOM 6	CUSTOM 16	-	-	-	-	241..243	-	214..216	244..246	-	241..243	-	214..216	244..246	-
CUSTOM 7	CUSTOM 17					244..246		217..219	247..249		244..246		217..219	247..249	
CUSTOM 8	CUSTOM 18					247..249		220..222	250..252		247..249		220..222	250..252	
CUSTOM 9	CUSTOM 19					250..252		223..225	253..255		250..252		223..225	253..255	
CUSTOM 10						253..255		226..228			253..255		226..228		

DELAY CHANNEL

			White	White	TW	RGBW	6C	8C
DELAY	0..45	NONE (The LED delay follows the set on the menu display)	-	YES	YES	YES	YES	YES
	46..55	0 ms						
	56..65	50 ms						
	66..75	100 ms						
	76..85	150 ms						
	86..95	200 ms						
	96..105	240 ms						
	106..115	300 ms						
	116..125	350 ms						
	126..135	400 ms						
	136..145	450 ms						
	146..155	500 ms						
	156..165	330 ms						
	166..175	600 ms						
	176..185	800 ms						
	186..195	900 ms						
	196..205	1000 ms						
	206..215	1200 ms						
	216..225	1400 ms						
	226..235	1600 ms						
	236..245	1800 ms						
	246..255	2000 ms						

Part 6. RDM (Remote Device Management)

This section shows the values that can be queried remotely through the RDM console.

Plasa/ESTA Denomination	Number of Channels
DEVICE_INFO	Reading of the following parameters: - RDM protocol version - Device Model ID - Product category - ID version sw - Number of DMX channels - DMX mode index - DMX address - Number of sub-devices - Number of sensors
IDENTIFY_DEVICE	LED power on - allowing fixture identification
DMX_START_ADDRESS	DMX address setting/reading
SOFTWARE_VERSION_LABEL	Text description version sw
SUPPORTED_PARAMETERS	List of supported parameters
DMX_PERSONALITY	DMX mode setting
DMX_PERSONALITY_DESCRIPTION	Obtaining textual description of DMX mode
DEVICE_MODEL_DESCRIPTION	Text description of the device model
MANUFACTURER_LABEL	Text description manufacturer
SENSOR_DEFINITION SENSOR_VALUE	Display of the values read by the temperature sensor, expressed in tenths of Celsius degree

Part 7. Error list (Mark-II)

Errore message	What does it mean?	White	White	TW	RGBW	6C	8C
LED NTC SENSOR ERROR	Incorrect sensor operation NTC LED	-	YES	YES	-	YES	YES
LED NTC OVERTEMPERAURE	Overheating of the sensor working temperature NTC LED						
MICRO NTC SENSOR ERROR	Incorrect sensor operation NTC MICRO						
MICRO NTC OVERTEMPERAURE	Overheating of the sensor working temperature NTC MICRO						
DRIVER1 NTC SENSOR ERROR	Incorrect sensor operation NTC DRIVER1						
DRIVER1 NTC VERTEMPERAURE	Overheating of the sensor working temperature NTC DRIVER1						
DRIVER2 NTC SENSOR ERROR	Incorrect sensor operation NTC DRIVER2						
DRIVER2 NTC VERTEMPERAURE	Overheating of the sensor working temperature NTC DRIVER2						
LOW SUPPLY VOLTAGE	The measured main voltage is below the threshold						
HIGH SUPPLY VOLTAGE	The measured main voltage is above the threshold						
OUT LED1 ERROR	Incorrect chain operation LED OUT 1						
OUT LED.. ERROR	Incorrect chain operation LED OUT ..						
OUT LED8 ERROR	Incorrect chain operation LED OUT 8						
ENCODER BUS ERROR	Communication error with encoder board						

Part 8. How to

This section shows the most common needs of a lighting designer and how to set the main functions.

HOW TO SET DMX ADDRESS AND TO CHOOSE DMX PERSONALITY (DMX CHART)

In order to control one or more fixtures via console, it is necessary to assign each one a DMX address and choose a DMX chart based on the parameters of the luminaire you want to control and the channels available on the console. At the first fixture, channel 1 is allocated and occupies as many channels as indicated in the chosen DMX chart.

DMX SETTINGS => DMX ADDRESS = 001

DMX SETTINGS => DMX PERSONALITY = 3ch (example)

If the second fixture is given the same channel and the same personality, it will behave like the first luminaire; otherwise it is necessary to give it the first free channel as an address and choose how to work it.

DMX SETTINGS => DMX ADDRESS = 004

DMX SETTINGS => DMX PERSONALITY = xxx

HOW TO EMULATE THE PERFORMANCE OF HALOGEN LAMP

To satisfy the most "nostalgic" light designers of halogen light and to approach the natural perception that the human eye has of an LED illuminated object, it is not enough that static light simulates halogen light, but that it is also in its dynamic regulation.

For an LED luminaire to behave like a halogen lamp 3 are the points to consider:

- the **dimmer curve** must be set as HALO
  OPTIONS → AMBER SHIFT = ON
- the **delay** should be adjusted to 1000 ms
  OPTIONS → LED DELAY = 1000ms
- the **amber shift** function must be activated (typical change to which an halogen lamp tends when dimmed decreasing the emission)
  OPTIONS → DIMMING CURVE = HALO
- mandatory: DMX PERSONALITY / CCT PRESET = 3200K

HOW TO INCREASE THE LIGHT OUTPUT +20%

All the fixtures are designed to work in a context of balance between luminous efficiency and optimal thermal regime so as not to cause the LED to work under stress. Where available, thanks to the LED BOOST function, the algorithm favors luminous efficiency (+20% in light output) to the detriment of thermal efficiency, giving more current to the LED, but it is exclusively compatible with FAN MODE = AUTO (= the fans are automatically adjusted based on the LED temperature). That means that, even with this function active, the LED TEMPERATURE function regulates the light intensity in case of overtemperature to avoid an early deterioration of the source.

It may happen that you need a light emission of the individual channels higher than the factory settings, without however exceeding the maximum power of the spotlight. When a tint or a CCT value is selected in which not all channels are at full, an algorithm increases the light output to achieve maximum efficiency. A microprocessor monitors the working temperature of the LED and updates the source control parameters in real time.

OPTIONS -> FAN MODE = AUTO

OPTIONS -> LED BOOST = ON

HOW TO SET THE FAN MODE

In order to function properly, the LED requires a cooling system, which can be passive (dissipation of heat by natural convection) or active (forced dissipation of heat using a fan).

FAN MODE:

- AUTO: the fans are automatically adjusted based on the LED temperature.(where variable fan noise is not a critical parameter)
- STANDARD: the fans are always kept at the default value (where a constant background noise is required without varying brightness)
- SILENT: the fans are always kept at the minimum value and in case of critical temperatures of the LED it automatically reduces the brightness

The **silent mode** function allows to intervene on the speed and therefore on the noise of the fans based on the internal temperatures of work detected by a thermostat

OPTIONS → FAN MODE = SILENT

HOW TO SET THE DISPLAY

To avoid unwanted light emission of the display you can turn it off.

OPTIONS → DISPLAY = OFF

If the fixture is mounted "upside down" it is also possible to rotate the display to make it easier to read.

OPTIONS → DISPLAY ROTATION = ROTATED

HOW TO REMOVE FLICKERING EFFECT IN CAMERAS

The flickering effect is manifested in the shooting when the emission frequency of the LED conflicts with the camera brush scan and can be solved by acting on the camera parameters or on the fixture parameters.

OPTIONS → OUTPUT FREQUENCY = xxx (find by trial and error - fine adjustment - the value that removes the flicker in the camera)

HOW TO HOW TO CALIBRATE LED COLORS

When using a group of fixtures it may happen that one or more of them, with the same DMX values, has a color component (eg: red) to be corrected to align the tint to the other luminaires. Simply enter the fixture menu and adjust the DMX value until the tints aligns with that of the other luminaires of the group.

LED CALIBRATION → RED CALIBRATION

HOW TO SET THE COLOUR CUSTOM PRESETES

In each color Hyperion series fixture there are two libraries:

- the first factory (STANDARD PRESETS) and
- the second customizable by the operator (CUSTOM PRESETS) which includes a storage phase and a playback. Both of these presets can be recalled by selecting the relevant DMX value or by turning the potentiometer

There are two ways to customize the CUSTOM PRESET:

with fixture display:

- SETTINGS –> STAND ALONE –> CUSTOM PRESETS –> CUSTOM PRESET 1
- set the desired color by changing the values of the individual colors by turning the dimmer
- click on the CONFIRM button for the final save
- wait 5 seconds and the 5 flashes confirming that saving has taken place

with DMX consolle:

- modify the DMX value of the SERVICE 1 channel until reaching the range of the parameter to be modified (e.g. CUSTOM PRESET 1) and leave the channel on this value
- set the desired tint by acting on the individual color channels
- save the tint by setting the DMX value of the STROBE & STORE channel in the range corresponding to STORE 1
- wait 5 seconds and the 5 flashes confirming that saving has taken place

FUNZIONI AVANZATE SULLA GESTIONE DEL COLORE

- **Plus/Minus Green** – si tratta di una funzione che consente una regolazione fine della componente verde del CCT selezionato per adeguarlo alle specifiche esigenze dell'applicazione.

- **Bilanciamento automatico** del colore durante l'intera dimmerazione per mantenere la stessa tinta quando diminuisce l'emissione di luce; l'algoritmo consente di:
  - mantenere fissa la lunghezza d'onda di ogni singolo chip LED colorato
  - mantenere costante il rapporto delle emissioni luminose tra i LED di diverso colore al variare dell'emissione luminosa

- **Booster**

- **Calibrazione**

HOW TO SET STAND-ALONE AND MASTER-SLAVE FUNCTIONS

May happen the need to control one or more fixtures without using a console. The software allows you to create one or more static colors and define the duration and sequence of each.

- to create a single static tint
  STANDALONE => STANDALONE = MANUAL

- create multiple static colors with customizable duration and sequence
  STANDALONE => STANDALONE = AUTO SCENE

The function can be set on a single fixture or on a group of fixtures. In this second case it is necessary to define the headlight "master" (MASTER, MANUAL or AUTO SCENE) and the headlights "slave" (SLAVE).

To disable these control modes in the absence of consoles simply reconnect the DMX cable and the fixtures will be controllable directly from remote.Tutto questo può riguardare un singolo faro (STAND ALONE) oppure un gruppo di fari nel quale è necessario però definire il faro “master” (MASTER) e i fari “slave” (SLAVE).

- DISABLED: The luminaire is controlled by the DMX input and by the potenziometer.
- STDALONE MANUAL: The luminaire ignores the DMX signal and the potenziometer. The colour can be set from the STANDALONE → MANUAL MODE
- STDALONE AUTO SCENE: The luminaire ignores the DMX signal and the potenziometer and performs the memorised scenes sequence (max 10 scenes) selectable from the STANDALONE → AUTO SCENE MODE
- MASTER MANUAL: The luminaire ignores the DMX signal, turns to a fix colour selectable from the STANDALONE → MANUAL MODE
  Being MASTER the luminaire sends via DMX the command to control the SLAVE luminaires connected in line
- MASTER AUTO SCENE: The luminaire ignores the DMX signal and the potenziometer and performs the memorised scenes sequence (max 10 scenes) selectable from the STANDALONE → AUTO SCENE MODE
  Being MASTER the luminaire sends via DMX the command to control the SLAVE luminaires connected in line
- SLAVE: The luminaire ignores the DMX signal and the potentiometer, and follows the MASTER luminaire via DMX line.

MANUAL MODE

Push UP or DOWN to select which item to edit (RED, GREEN,..)
Press ENTER to proceed with the editing: the value next to the item lights up. Use the dimmer potentiometer to edit the value
Press ENTER to confirm the editing, ESC to go back
Once all the desired items are edited:
- move to CONFIRM and press ENTER to confirm or move to ABORT and press ENTER to cancel the changes
- press ESC on any entry to exit without saving the changes

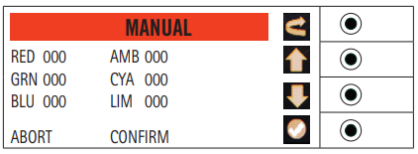

AUTO SCENE MODE

Push UP or DOWN to select which item to edit (RED, GREEN,.)
Press ENTER to proceed with the editing: the value next to the item lights up. Use the dimmer potentiometer to edit the value
Press ENTER to confirm the editing, ESC to go back
Once all the desired items are edited:
- move to CONFIRM and press ENTER to confirm or move to ABORT and press ENTER to cancel the changes
- press ESC on any entry to exit without saving the changes

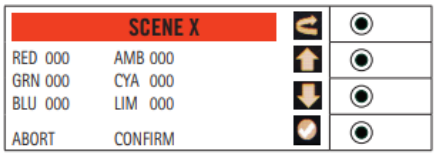

Item	Value	Def	Description
SCENE SET			You enter in the scene setting screen, described in the relevant paragraph.
PAUSE TIME	0.1 .. 60.0 s	1.0 s	It is the duration time of the scene
FADE TIME	0.1 .. 60.0 s	1.0 s	It is the fading time towards the next scene
SCENE DELETE	Enter to Delete Esc to Exit		Deleting of the scene
FROM DMX	Enter to Copy from Dmx Esc to Exit		Copy of the scene from Dmx signal: press Enter to see the set scene through Dmx and press Enter again to confirm the copy. In case of DMX absence, "Dmx Not Present" will be displayed
SCENE COPY	Enter to Copy Esc to Exit		COPY of the scene: the scene (RGBACL values + pause time and Fade) is copied in the memory so to be pasted later
SCENE PASTE	Enter to Paste Esc to Exit		PASTE the scene: the scene previously copied is pasted on the activescene.

CUSTOM PRESETS

Push UP or DOWN to select which item to edit (RED, GREEN,..)
Press ENTER to proceed with the editing: the value next to the item lights up. Use the dimmer potentiometer to edit the value
Press ENTER to confirm the editing, ESC to go back
Once all the desired items are edited:
- move to CONFIRM and press ENTER to confirm or move to ABORT and press ENTER to cancel the changes
- press ESC on any entry to exit without saving the changes

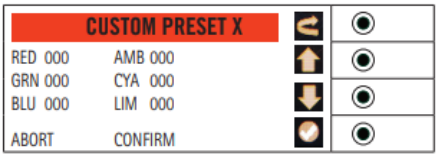

Read How to set the colour custom presets

Part 9. Logistics

The following table shows the weights and dimensions of the fixtures and the relative packaging.

Fixture							Packing				HS Code
Power	Type	Code	Weight (kg)	Dimensions (cm)			Weight (kg)	Dimensions (cm)			
				Length	Width	Height		Length	Width	Height	
50W	Fresnel	**FN LED 50** CW / WW	3	25	16	27	3,5	40	22	22	94054210
		FN LED 50 RGBW									
	PC	**PC LED 50** CW / WW		29				51	26	26	
	Profile	**PR LED 50 ZS** WW / RGBW	4				5				
	Accessories	TC MINI	0,1	10	0,4	10	0,1	10	0,4	10	94059900
		PL 4 MIN	0,4	15,5	11,5	3,3	0,5	18	13	4,4	
		PGM MIZO	0,1	15,3	6,7	5	0,1	15,3	6,7	5	
100W	Fresnel	**FN HY LED 100** CW / WW	3,5	31	22	29	4,1	38,5	22,5	18,5	94054210
	PC	**PC HY LED 100** CW / WW									
	Profile	**PR HY LED 100 ZS** CW / WW	6,2	54	34	40	7,6	57	27,5	27,5	
		PR HY LED 100 ZW CW / WW	6	45			7,4				
	Accessories	TC S05	0,1	14	0,4	14	0,1	14	0,4	14	94059900
		PL 4 U05	0,8	22,5	17	3,5	0,9	24,5	19	5,5	
		DIA 05	0,3	8,5	10,5	2,5	0,3	21	13	5	
		PGB R 100	0,1	21	10	0,5	0,1		10	0,5	
200W	Fresnel	**FN HY LED 200** CW / WW	6	36	30	35	6,7	46,5	31,5	38	94054210
		FN HY LED 200 TW / RGBW / 6C	7,5	45		39	8,7				
	PC	**PC HY LED 200** CW / WW	6	36		35	6,7				
		PC HY LED 200 TW / RGBW / 6C	7,5	45		39	8,7				
	Profile	**PR HY LED 200 ZS** CW / WW / TW / RGBW / 6C	11,5	76	34	47	13,5	92	36	40	
		PR HY LED 200 ZW CW / WW / TW / RGBW / 6C	11	64			12,5	82	34	37	
	Accessories	TC HY 200	0,1	18,5	0,4	18,5	0,1	18,5	0,4	18,5	94059900
		PL 4 HY 200	1	28,5	21	4	1,1	34	23	5,5	
		DIA HY	0,2	21,7	12	1,3	0,3	25	18	1,5	
		PGB HY	0,1	24	9,5	0,4	0,1	24	9,5	0,4	
		PR HY OP ZS	6,2	48	25,5	23	7,6	71	36	40	
		PR HY OP ZW	5,2	36			6,5	46,5	31,5	38	
300W	Fresnel	**FN HY LED 300** CW / WW / TW / 6C	9,5	48	30	43	10,9	71	36	40	94054210
	PC	**PC HY LED 300** CW / WW / TW / 6C	12,5	57		47	13,5				
	Profile	**PR HY LED 300 ZS** CW / WW / TW / 6C	15	76	34		18,5	92			
		PR HY LED 300 ZW CW / WW / TW / 6C	14	64			18				
	Followspot	**FS HY LED 300** CW	19	100	35	35	22	115	40		
	Cyclorama	**CYC LED 300** RGBW	15	57	43	25	18,2	61	57	33	
	Accessories	TC S25	0,3	25	0,4	25	0,3	25	0,4	25	94059900
		PL 4 U25	1,7	38	27	3,5	1,7	42	29	5,5	
		PL 8 U25	2				2				
		PL 4 HY3 PLUS									
700W	Fresnel	**FN HY LED 700** CW / WW / TW / 8C	18	60	40	50					94054210
	PC	**PC HY LED 700** CW / WW / TW / 8C	20	69							
	Profile	**PR HY LED 700 ZS** CW / WW / TW / 8C	31	127		47					
		PR HY LED 700 ZW CW / WW / TW / 8C	28	92							
	Followspot	**FS HY LED 700** CW	36	144		42					
	Accessories	TC HY 700	0,4	30	30	0,4	0,4	30	30	0,4	94059900
		PL 4 HY 700									
		DIA HY 700									
		PGB HY 700									